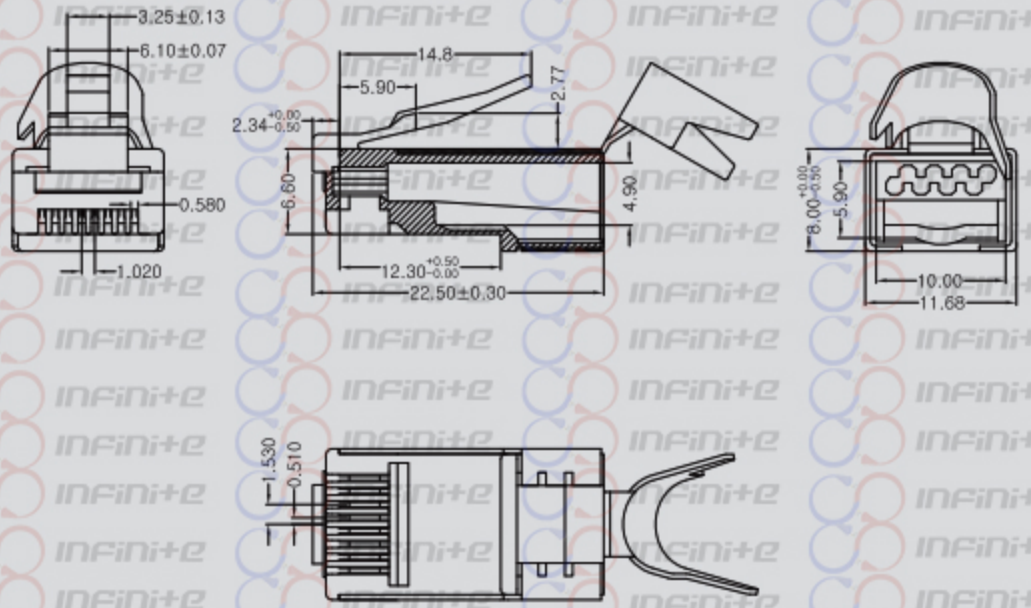

TERMINAL	2385S	2470	2335S	2347SC		OTHER
DRAWING						
MARK						

GOLD PLATING	Fu"	1u"	3u"	6u"	15u"	30u"	50u"	OTHER
MARK								

Plug RJ45 Cat. 6A
INFINI+E

Inspection for Environmental Protection:

Based on the performed tests on submitted sample,
the test results are Compliant with the limits of RoHS and REACH.

Electrical Test:

A. 250V AC max, at 2A.
B. Dielectric withstanding 1000V DC/min, <0.5A.
C. Insulation Resistance: >500 MΩ, 1000V DC/min.
D. Contact Resistance: <20 MΩ.

Mechanical:

A. Cable-to-plug tensile strength-20LBS(89N)min.
B. Durability: 2000 mating cycles.

Operating Temperature: -40℃~+125℃.